Converting Static HOScale Bachman Block Signals to Operating Green/Red LEDs

Project 12a *www.modeltrainsounds.com*

Adding LEDs to a Bachmann(TM) Block Signals

This project uses 2 LEDs to replace the 2 fake green and red lens aspects present on a non operational Bachmann(TM) Block Signal to create an operational signal. The 2 LEDs are set up by soldering their leads reversed so that a third common wire is not required. It can be manually operated using an electrical circuit with a double pole single throw switch or it can be operated using a simple occupancy detection system with a relay switch to reverse the polarity.

THE SIGNAL with a GREEN and RED LED replaced in the signal heads, are connected to two wires threaded down the stem between the ladder and out of the base. The wires can be directed to under the layout to the switching control circuit. The signals are prepared in the following steps.

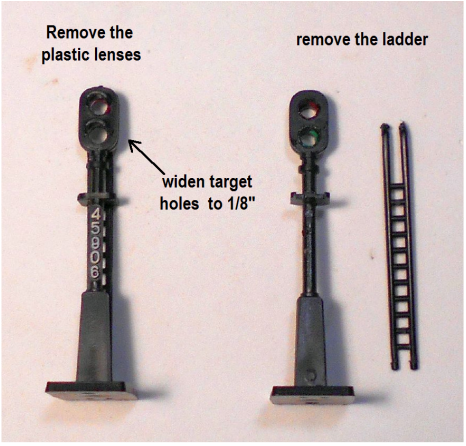

Carefully remove the plastic lens using a fine drill bit and round file. Widen the lens holes to 1/8" to accommodate the 3 mm LEDs. The ladder can be removed using gentle pressure on the base connections and upper stand.

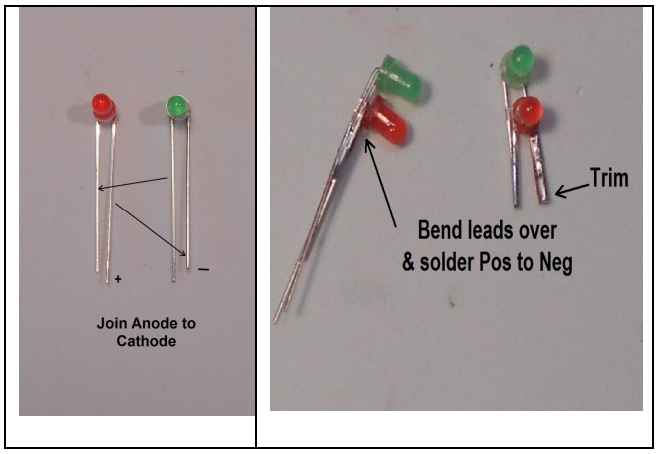

Decide how you wish to have the LEDs displayed. Bend the lead over and solder the leads of the 3mm Red and Green LEDs together in reverse with the Positive long lead soldered to the short Negative lead. Trim the ends to neat

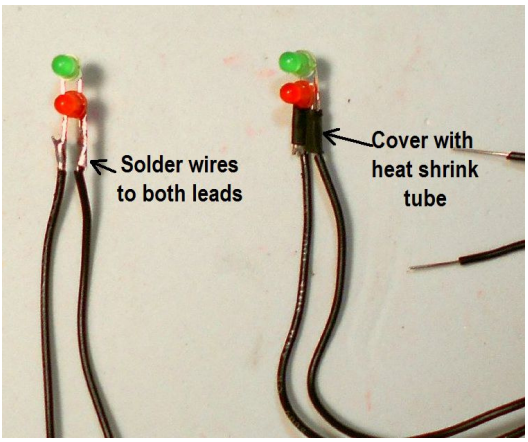

Use 6-8 inches of solid wire 26 or 28 G wire and solder the ends to the LED leads. Cover the joints with a short piece of heat shrink tubing and shrink with hot air.

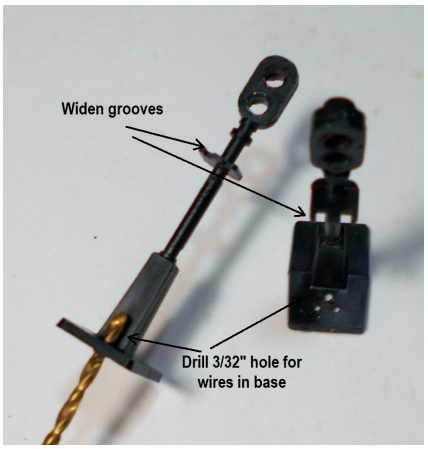

Drill a hole in the base 3/32 " in diameter for the wires to exit. Use a pilot drill first
Using a file widen the grooves in the stand to accept the wires and the ladder.

.

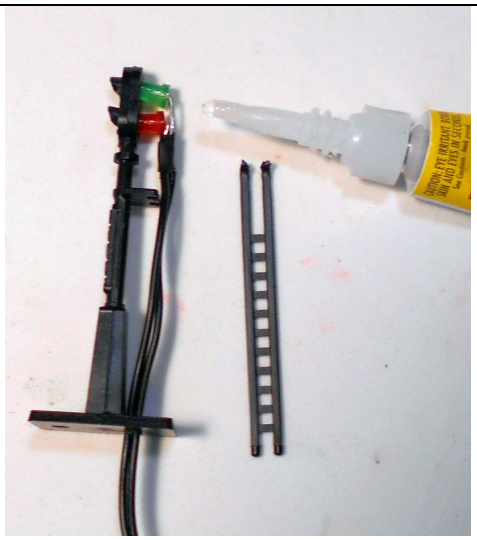	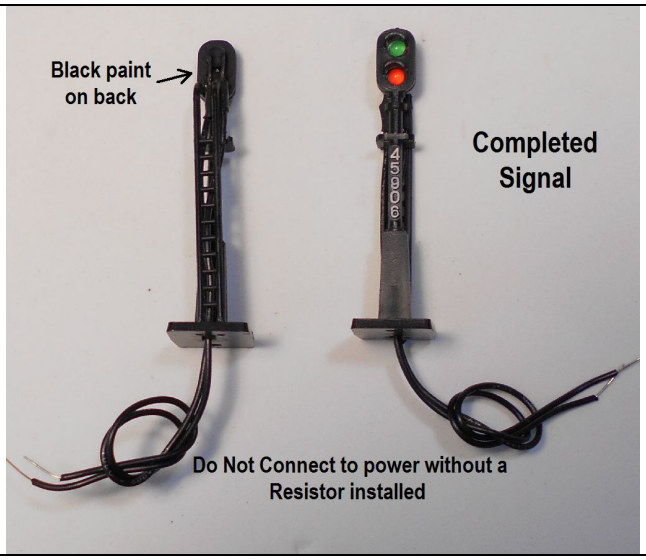
Insert the LEDs into the Target holes. The LEDs can be glued in place with CA glue. Thread the wires down through the hole in the base. Reattach the ladder to the base and stem of the signal. Glue is used to secure the ladder.	The wires and back of the LEDs are painted black. The Signal is ready **but** should not be tested without a resistor attached in the circuit. See Project 12b for manual operation of the signal or Project 12c for an automated operation using a simple train detection system.

DO NOT CONNECT THE SIGNAL WITHOUT THE LED DRIVER OR A RESISTOR IN PLACE

Project 12b

Manual Operation for Modified Bachmann(TM) Signals.

This manual system employs a Double Pole Double Throw (DPDT) switch to change the direction of the circuit current and thus the aspect of the signal from Green to Red. A 9 Volt Battery or power pack is used to power the circuit. A LED driver chip is used to provide a constant 20 milliamps of current for voltages between 7 to 16 volts. Connection wires with male and female Dupont(R) connection plugs are used to connect to the signal. Additional wiring can be added to set the power source away from the signal. Heat shrink tubing is used to cover the solder connections.
Two signals can be operated simultaneously on the one power supply and switch (see website).

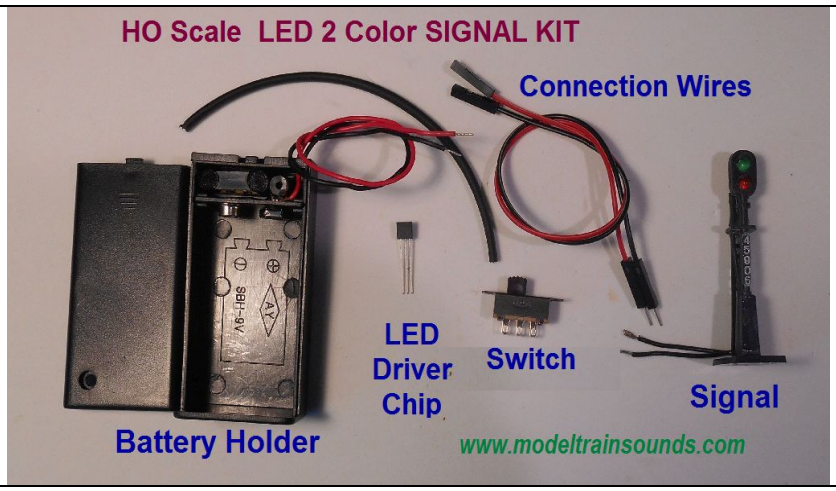	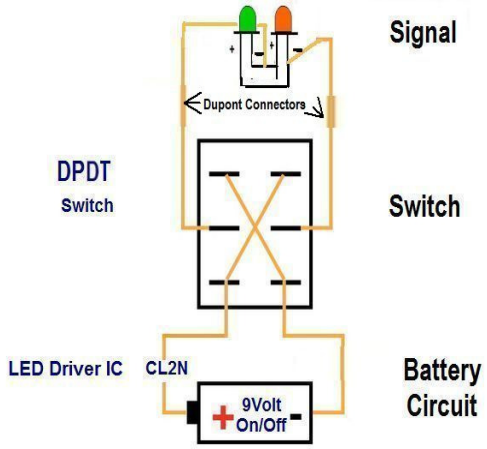
Components of the manually operated Signal Kit as described above.	**Wiring Circuit schematic**

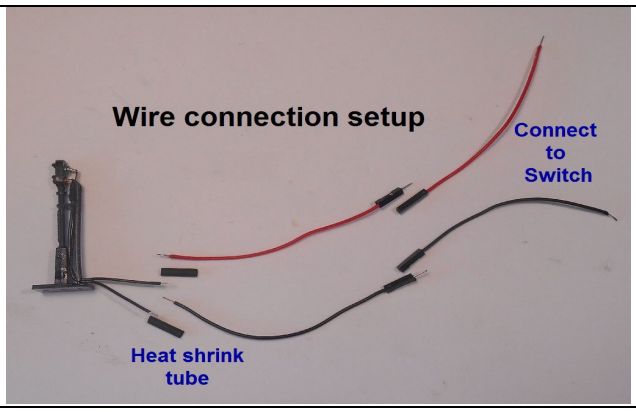

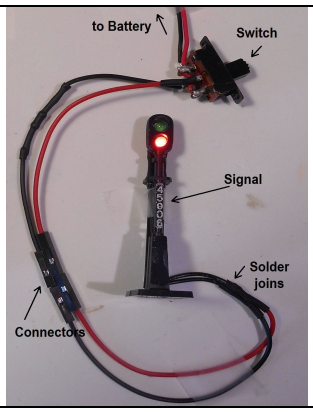

Assembly: Attach the connection wires by cutting the wire in the middle and soldering the free ends of the wires with the male plugs to the signal wires. Cover joints with heat shrink tube before soldering and shrink over the joint.

The female connecting wires connect to the switch via inter-connection wires (not shown) back to the switch pins.

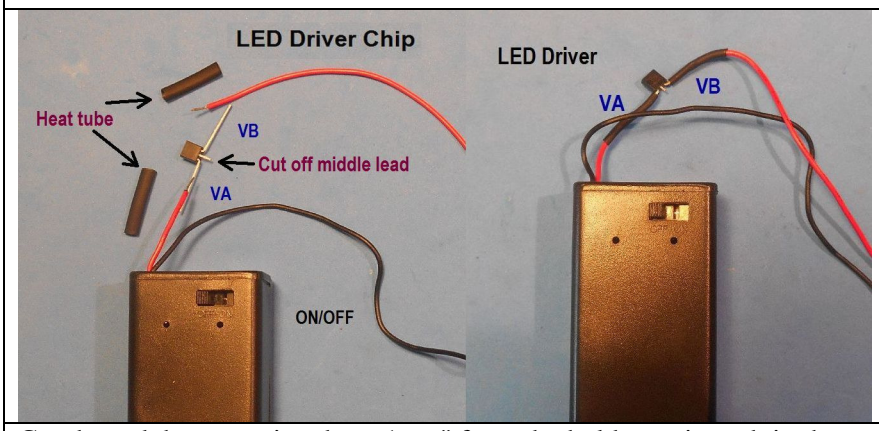

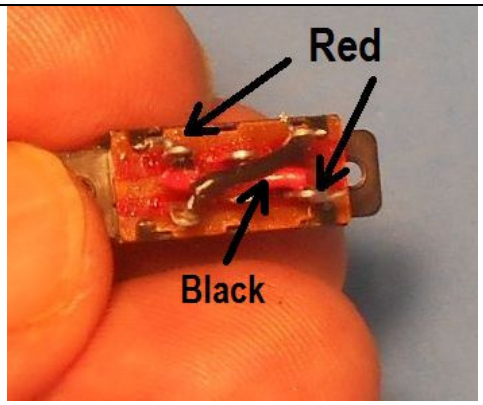

Cut the red battery wire about 1 1/2" from the holder, strip and tin the ends. Use heat shrink tube to cover the solder joints. Bend out the leads of the LED Driver chip out with flat side facing you. The lead on the left is the VA lead and on the right VB. Snip off the middle lead. Solder the 2 leads to the red wires as shown covering the joints with shrink the tubing. Shrink with a heat gun or hair dryer set on high. Finished setup is on the right.

Cut off around 1" from the ends of the red and black wires. Strip and tin both ends . Now solder these red & black wires across to the end pins.

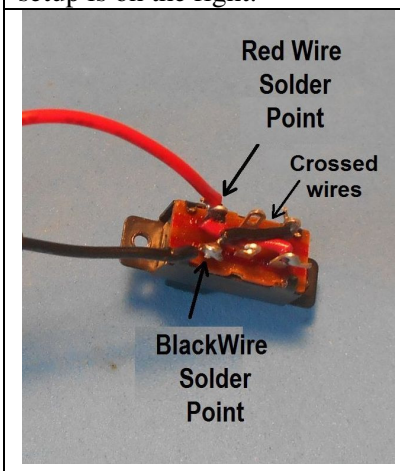

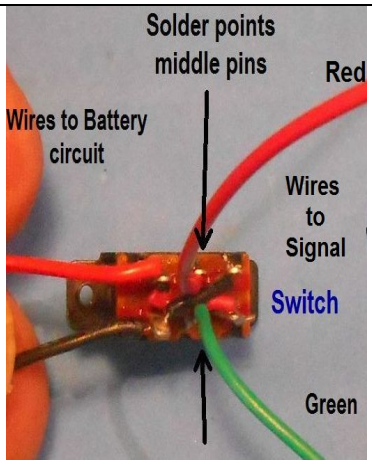

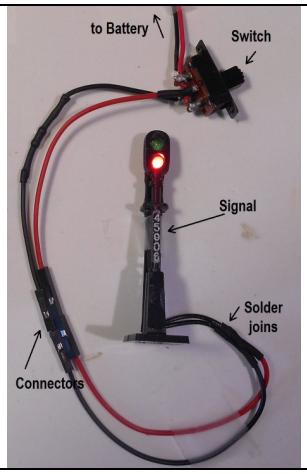

Solder the battery wires to the 2 pins at one end pole of the switch. The switch can be located anywhere on the layout but will require inter-connecting wires. Use 28 gauge wires for this purpose.

Solder the interconnecting wires to the center pins. These wires will vary in length depending on where the power unit and switch are to be located. These wires are not included in the Kit.

The interconnection wires are soldered to the wires with the female connection wires.
Here the wires are directly connected to the switch .

Project 12c

Automatic Operation for the Modified Bachmann Signals

This project involves automating the operation of a modified Bachmann(TM) Block Signal described in Project 12a. This modified signal is changed by a neodymium magnet attached to the undercarriage of the locomotive that activates a reed switch set in the track. The reed switch activates a relay switch on a signal circuit board with an adjustable delay to change the Green LED to Red once the train passes. After the delay the Red light returns to Green. The circuit board works by reversing the polarity of the current going to the LEDs. The Signal set up is shown below.

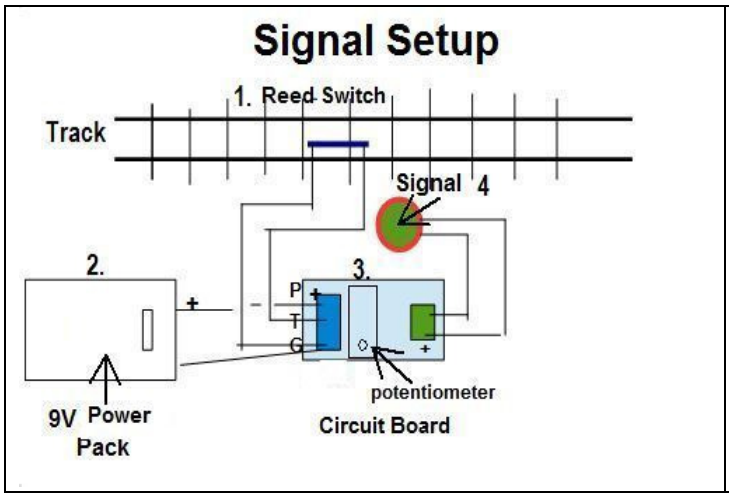

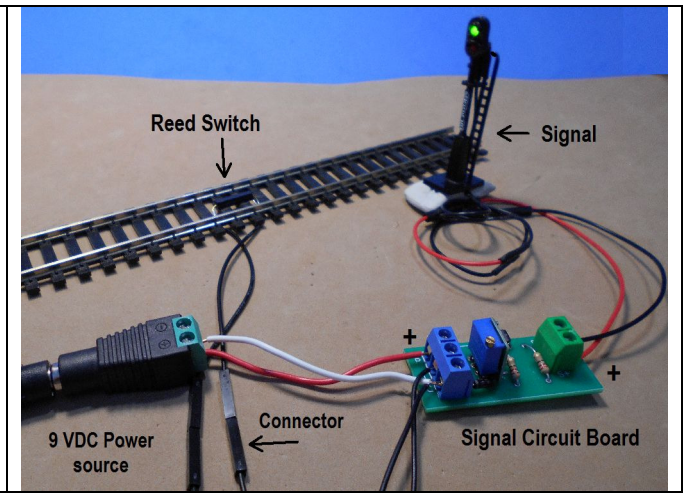

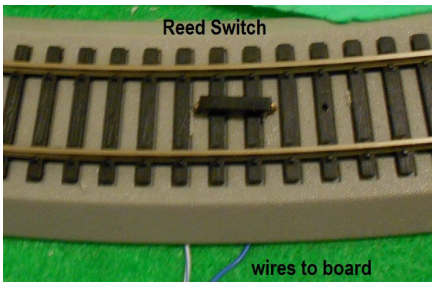		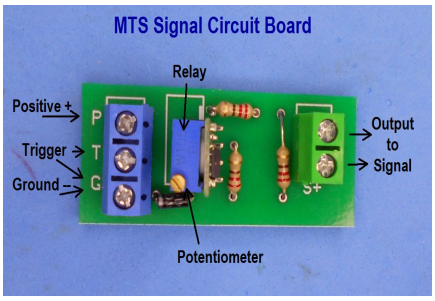
1.The Reed Switch has two wires soldered to the ends. The switch is laid parallel to the track between the rails at a location next to the signal. The wire are inserted between the ties and are attached to the middle and ground ports of the circuit module Blue Plug. The order of attaching the wires is irrelevant.	**2. The Power Pack** consists of a 9 Volt DC wall power source . The Positive output is attached to the + (P) port of the circuit board and the (negative) wire is also attached to the Ground (G) port on the circuit board. A 9 Volt battery pack can also be used with an alkaline or rechargeable battery. The battery life is about 12 hours of continuous use.	**3. The Signal Circuit Board** contains the Relay Module, Timer Chip and the circuit that reverses the current flow and sets the time delay for the red LED. The screw on top of the Blue potentiometer sets this delay. Turning the screw clockwise increases the time delay , counter clockwise decreases the delay. Timing can be set between (0-20 seconds)

	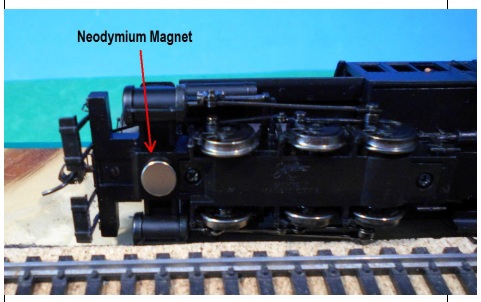	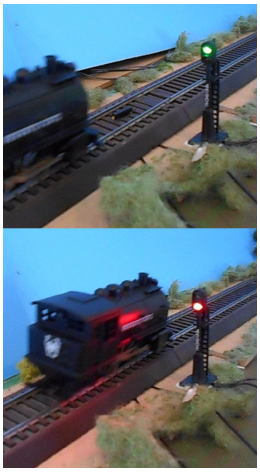
4. The Signal is connected to the green plug on the board via two connecting wires. There is no need for a resistor on the wire as the resistors required are located on the circuit board. The wires are attached to the plug so that the green LED is lit when the signal is in ready mode.	**The Neodymium Magnet** is attached to a metal surface on the underside of the locomotive such as a screw. These magnets are powerful and will hold securely. Glueing is an option if no metal surface is present. The magnet can be changed to other locomotives as needed.	**Operation.** When the locomotive crosses over the reed switch the Green LED goes out and the Red illuminates for a period of time set by adjusting the screw on the potentiometer on the board as previously described.

Operation Red Loco Stop. Green -: Loco Moves Red as train enters block

Kits Available

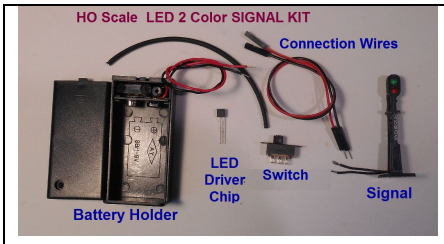	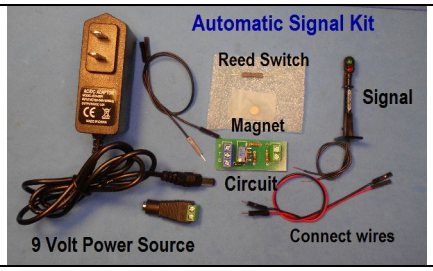	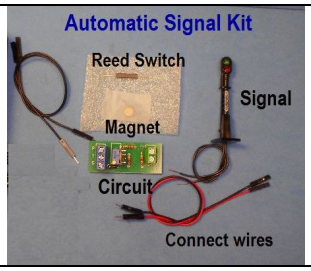
Manual Kit. Assembled Signal + 9V Battery holder operated with DPDT switch. requires some soldering.	**Automated Kit with Power.** 9VDC Power pack, automated signal circuit board, magnet, reed switch and assembled Signal.	**Add on Automatic Signal** for multi signal operation using a power distribution board. (see Project 21)

Other Accessories are available at the website (unassembled signal kit, 6mm magnets, Power packs)